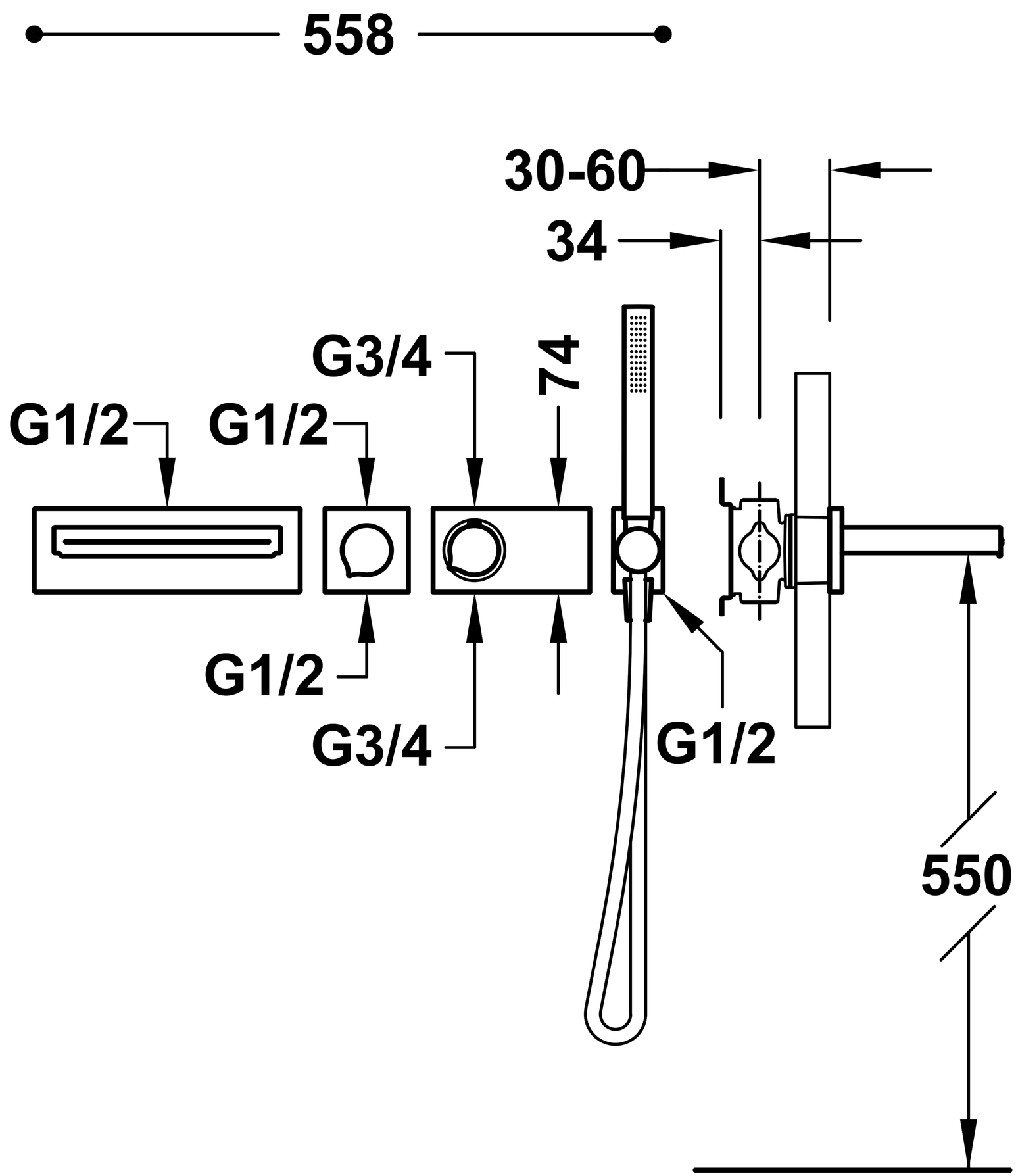
558
30-60
34
G3/4
74
G1/2
G1/2
G1/2
G3/4
G1/2
550