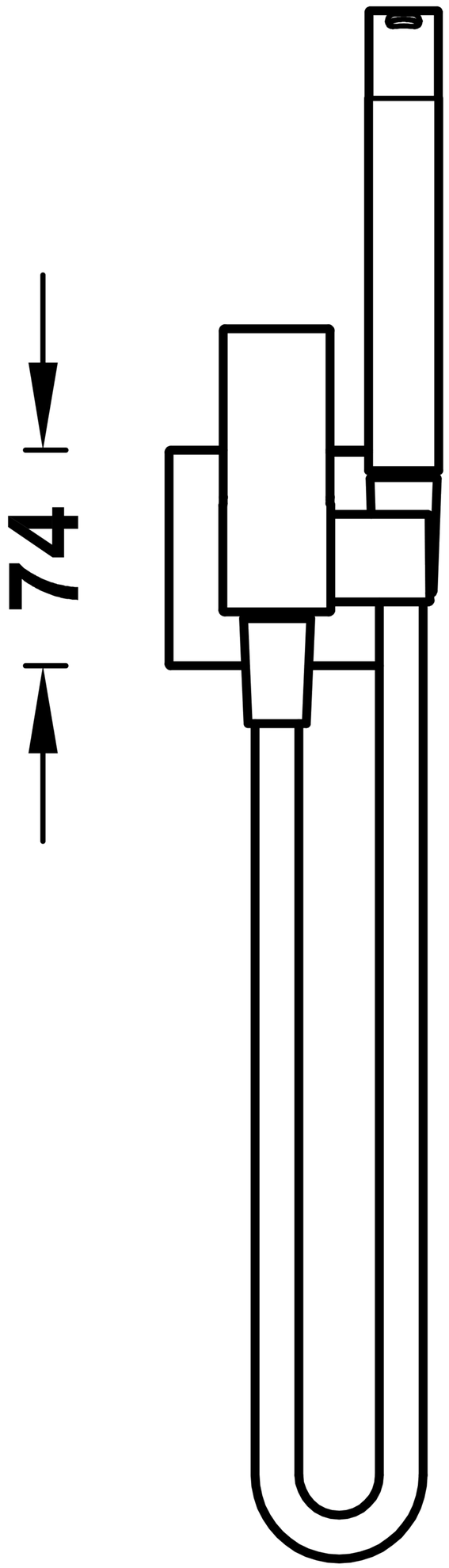
74

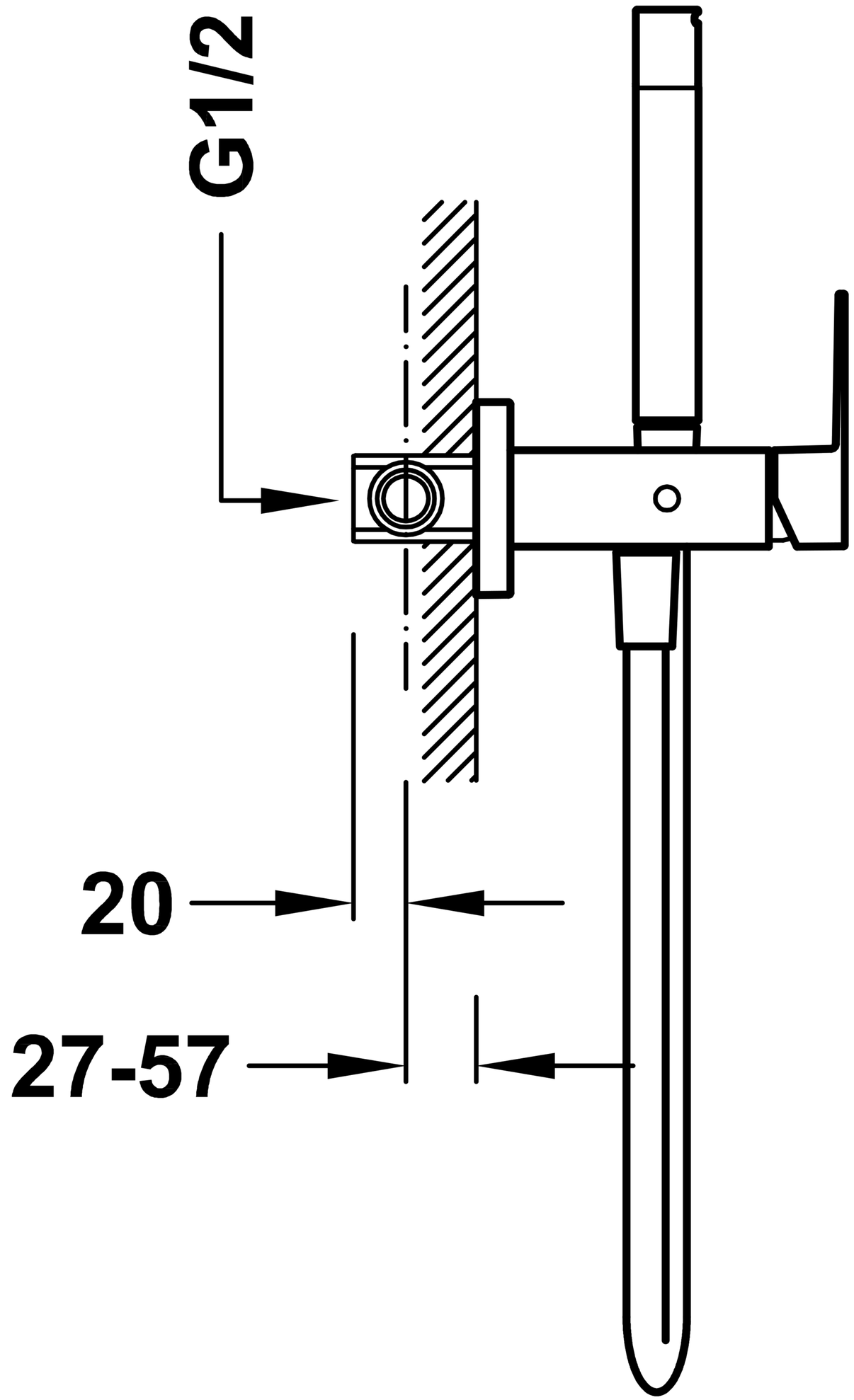
G1/2
20
27-57